Since 1959

PART NO.	BASE TYPE	DESIGN VOLTS	DESIGN WATTS	APPROX. INITIAL MAX CP	BEAM SPREAD HOR. X VER. DEGREES	AVERAGE LIFE HOURS (AT 14V)
H6054	3 CONTACT LUGS	12.8 12.8	65 35	40,000 35,000	35 x 7 35 x 7	150 450

REVISIONS

REV #	DESCRIPTION	DATE	APPROVED
1	ISSUED	11/10/2016	RM

H6054 12.8/12.8V 65/35W

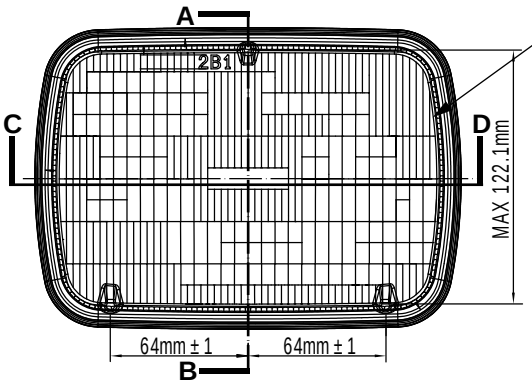

RECTANGULAR

FILAMENT
TYPE: C-6/C-6

0° VIEW

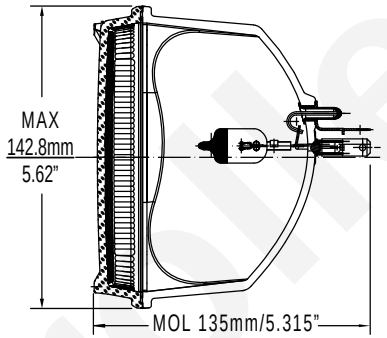

SECTION A - B

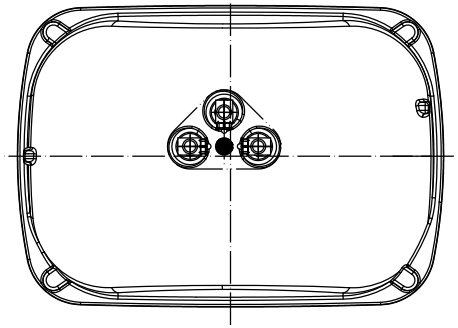

180° VIEW

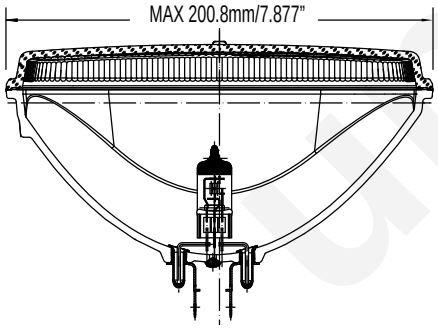

SECTION C - D

Note: Made according to SAE specifications

UNLESS OTHERWISE SPECIFIED:
DIMENSIONS ARE IN INCHES
TOLERANCES
DECIMALS ANGULAR
.XX ± .05 ± 0.5°
.XXX ± .010
FRACTIONAL ±1/64

CEC INDUSTRIES LTD
599 BOND STREET LINCOLNSHIRE, IL 60069

DRAWN: ROSE MEDINA	DATE: 11/10/2016	TITLE: SEAL BEAM H6054	
CHECKED		SIZE: A / FSCM NO. / DWG NO.: H6054	REV: 1
DESIGN		SCALE / PLOT SCALE	SHEET: 1 OF 1
MATERIAL		FILE: H6054.pdf	DRAWING NOT TO SCALE

Uncontrolled